SENCOR®

S-4800SC

Mobile Stereo System 4-Band Radio Recorder

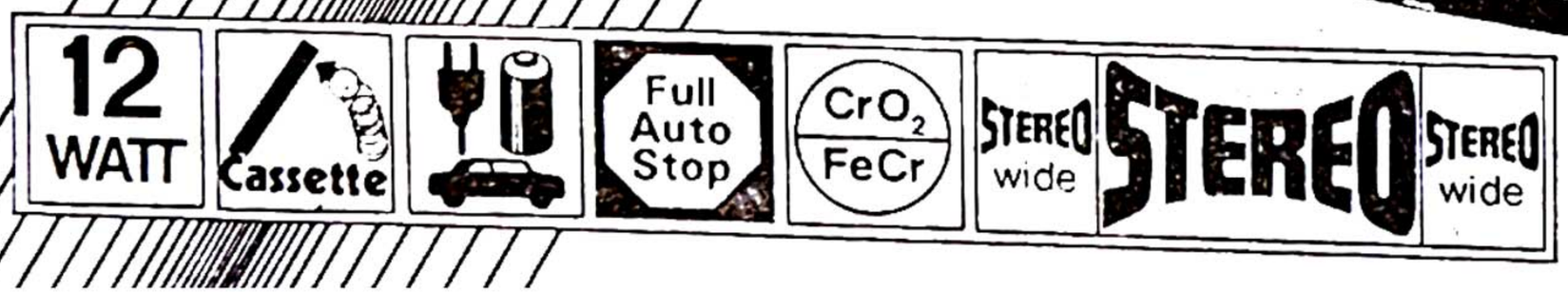

SPECIFICATIONS

Type	:	4 Band Radio-Recorder with LCD Quartz Clock
Circuit	:	4 ICs, 40 Transistor, 22 Diode (2 LED)
Power Source	:	AC 220-240V/110-120V, 50/60Hz DC 12V, UM-1 x 8 or Car Battery DC 3V, UM-3 x 2 (for Clock)
Output Power	:	DC 3.5 Watts, Max. per channel at 4 ohm AC 4.6 Watts, Max. per channel at 4 ohm
CLOCK SECTION (LCD Quartz Clock)		
Circuit	:	1 LSI, 3 Transistor, 3 Diode
RADIO SECTION		
Frequency Range	:	FM 87.5 – 108 MHz SW1 2.1 – 6.0 MHz SW2 6 – 16 MHz (19 – 49 meter) MW 520 – 1605 KHz
I. F.	:	FM 10.7 MHz AM 460 KHz
Antenna	:	Telescopic Aerial for FM and SW2 Ferrite Bar Aerial for MW and SW1 FM Aerial jack (300 ohm) AM Aerial jack
TAPE RECORDER SECTION		
Microphone	:	Electret condenser microphone
Motor	:	DC 9V Electrical governer motor
Tape Speed	:	4.75cm/sec.
Wow & Flutter	:	0.3% (DIN)
Fast Forward and Rewind time	:	90 sec at C-60 Tape
Recording System	:	AC Bias 70KHz
Erasing System	:	AC Erase 70KHz
Frequency Response	:	60 – 10,000 Hz (normal tape) 60 – 12,000 Hz (CrO_2 tape)
OTHERS		
Speaker	:	Woofer 16cm x 2 pcs (4 ohm) Tweeter 5cm x 2 pcs (4 ohm) External Speaker jack (Max. 5W per channel at 4 ohm)
Dimensions	:	520mm(W) x 191mm(D) x 320mm(H)
Weight	:	8 Kg (without batteries)
Accessories	:	AC Cord

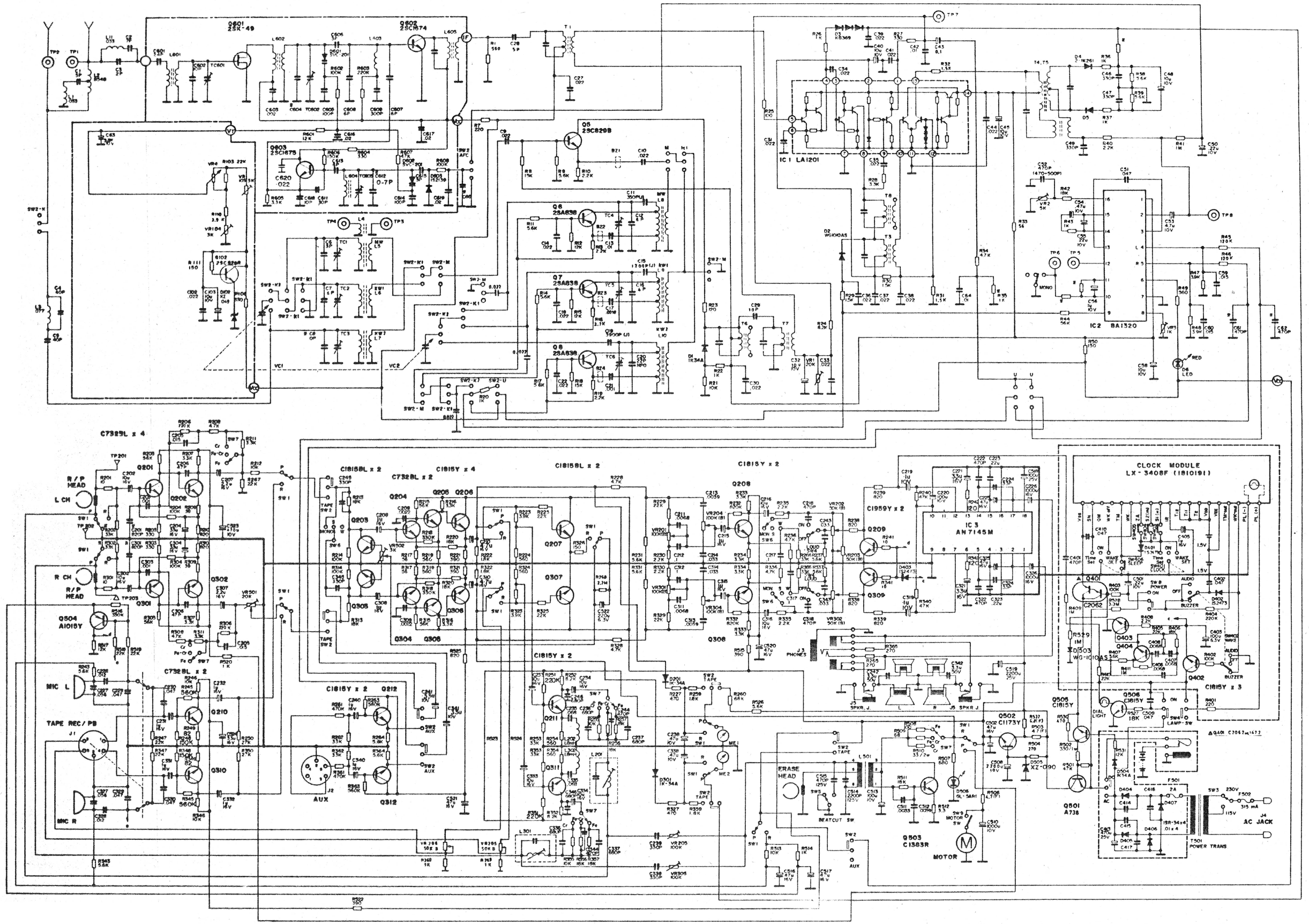
Q601 2SK-49
Q602 2SC874
Q603 2SC1675
Q5 2SC829B
Q6 2SA838
Q7 2SA838
Q8 2SA838
IC 1 LA1201
IC 2 BA1320
IC 3 AN7145M
CLOCK MODULE LX-3408F (1810191)
C7329L x 4
C1815BL x 2
C7328L x 2
C1815Y x 4
C1815Y x 2
C1959Y x 2
C1815Y x 3
R/P HEAD
L CH
R CH
MIC L
MIC R
TAPE REC/PB
AUX
ERASE HEAD
MOTOR
AC JACK
POWER TRANS
PHONES
SPKR. J.
Q504 A1015Y
Q501 A738
Q502 C1173Y
Q503 C1383R
Q506 C1815Y
Q401 C2062
D503 WG-1010AS
D2 WG1010AS
D6 LED
RED
MONO
BUZZER
DIAL LIGHT
LAMP-SW
BEATCUT SW
MOTOR SW
REMOTE WAKE
AUDIO
SW 9 POWER
Time Set
WAKE SET
SWS(1) CLOCK
SWS(2) SLEEP
SW4(1) LAMP-SW
SW4(2) DIMMER
SW3 230V
F502 315 mA
F501 2A
T501 POWER TRANS
ISR-34x4 01x4
D401 15.3V
D402 B.2473
D403 1S2473
D404 D407 D408 D409 D410 D411 D412 D413 D414 D415 D416 D417
D501 D502 D503 D504 D505 D506 D507 D508 D509 D510 D511 D512 D513 D514 D515 D516 D517 D518 D519 D520 D521 D522 D523 D524 D525 D526 D527 D528 D529 D530 D531 D532 D533 D534 D535 D536 D537 D538 D539 D540